CATEGORY	DESCRIPTION	P/N #
CONNECTOR	RJ45 10/100Mbps with LED	MJ5A-B211-RSLA5T148-02

REV.	ECN NO	DESCRIPTION	REVISED	DATE
A01	———	———	KELLY	2015.03.18

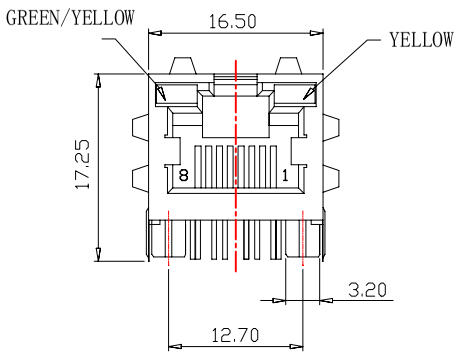

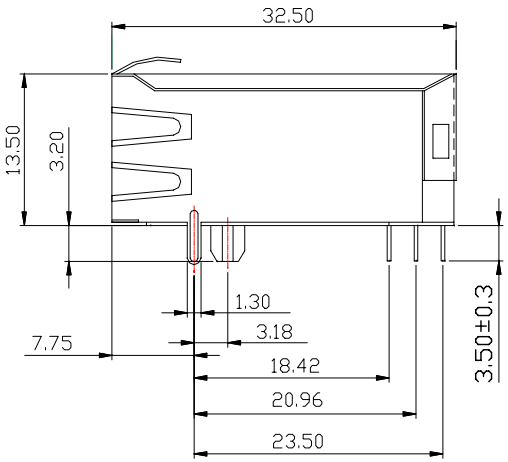

ELECTRICAL SPECIFICATIONS @ 25°C+/-5°C

Insertion Loss: 1-100MHZ -1.0dB MAX

Return Loss: 1-30MHZ -16.0dB MIN
30-60MHZ -14.0dB MIN
60-80MHZ -10.0dB MIN

Cross Talk: 1-30MHZ -40.0dB MIN
30-60MHZ -35.0dB MIN
60-80MHZ -30.0dB MIN

Turn Ratio: 1CT:1CT+/-3%

CMR:1-100MHZ -35.0dB MIN

Hi-Pot: 1000v AC 2S 1mA

OCL:350uH MIN @ 100KHZ 100mV 8mA DC

Operating temperature range:0°C to +70°C

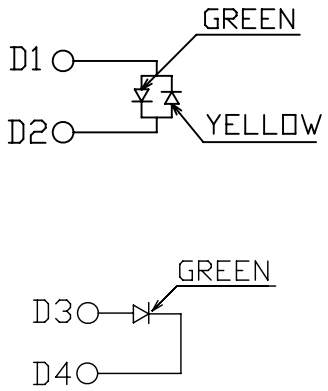

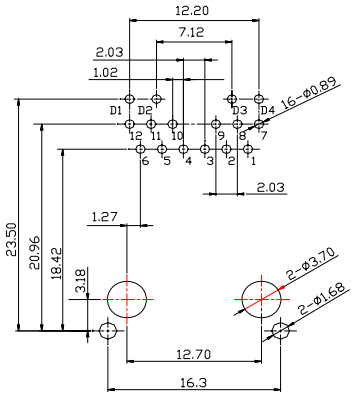

Recommend PCB Layout
(Jack Top View)
Tolerance: ±0.05mm

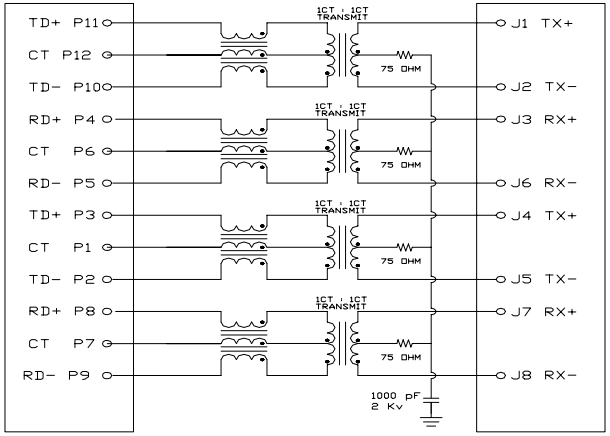

NO.	PART NAME	Q'TY	MATERIAL	PLATING & COLOR	Remark
g	LED-R	1	See Table1	Tin PALTING	
f	LED-L	1	See Table1	Tin PALTING	
e	SHELL	1	BRASS	Ni PALTING	
d	SOLDER TERMINAL	12	BRASS	Tin PALTING	
c	CONTACT TERMINAL	8	PHOSPHOR BRONZE	Au 6u" PALTING	
b	COVER	1	PBT UL94V-0	BLACK	
a	HOUSING	1	PBT UL94V-0	BLACK	

東莞市合陵電子有限公司
DongGuan HeLing Electronic Co.,LTD
Connector

UNLESS OTHERWISE SPECIFED TOLERANCES

DECIMALS: X :±0.5, X.X :±0.3, X.XX :±0.2
ANGLES: X :±2°, X.X :±1°

SCALE:1/1	UNIT: mm	DWG.NO:
SIZE: A3	PAGE:1 OF 1 REV:A01	WI-161-055

APPROVED BY	CHECKED BY	PREPARED BY
TONY	BILL	KELLY

CUSTOMER COPY